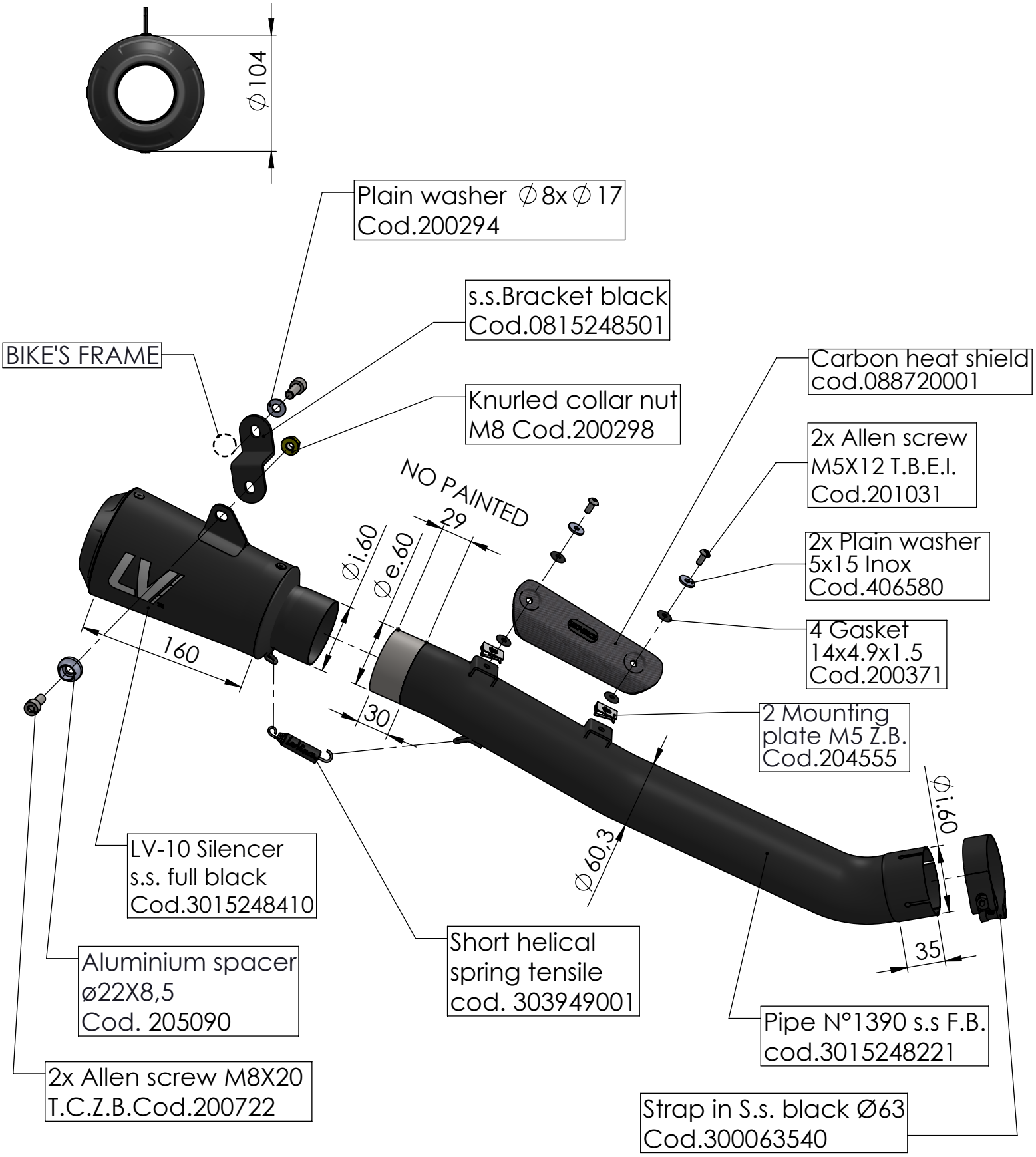

ART. 15248FB

APRILIA RSV4 1100 / FACTORY - TUONO V4 1100 / FACTORY

SLIP-ON - LV-10 - FULL BLACK